Item Number
RAM-VB-102

RAM No-Drill™ Seat Bases

National Products, Inc.

Vehicle base for the

Chevrolet 2500 C/K (2000-2006)
Chevrolet 3500 C/K (2000-2006)
Chevrolet Silverado (1999-2006)
Chevrolet Suburban (2000-2006)
Chevrolet Tahoe (2000-2006)
GMC Sierra Truck (2000-2006)
GMC Yukon (2000-2006)

SPECIFICATIONS

Placement
Installs on passenger side in between seat Cushion and seat rails.

Drilling Required
None - uses existing seat bolts

Seat Configuration
Bucket

Construction/Finish
Steel/Black Powdercoat

Dimensions
A = 16", B = 8", C = 4.69", D = 6.75", E = 4”
Hole Center = 11.75”

Pole or Pedestal
Ordered Separately

Weight

Notes

For vehicles with power seats please see RAM-VB-131A . Angled step moves mount away from passenger leg space. There are a total of 3 pieces of steel that make this part, 2 are welded together and the 3rd is bolted. Base will not interfere with factory installed console or 4WD lever.

Shown In Use

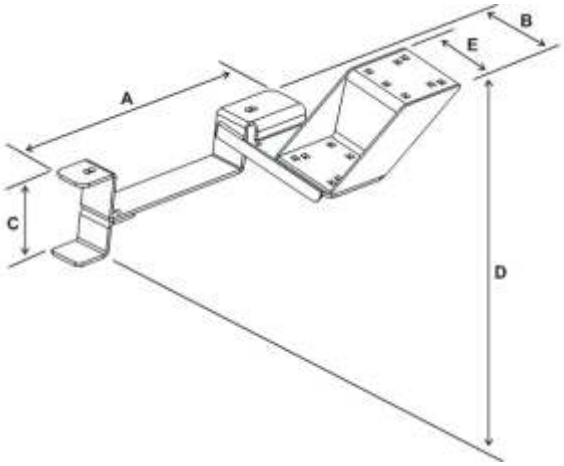

RAM-VB-102, SHOWN WITH
RAM-VB-SB4 RISER (INCLUDED)

National Products, Inc.
Phone: 206-763-8361
Fax: 206-763-9615
Address: 8410 Dallas Ave S
Seattle, WA 98108
Website: www.ram-mount.com
Email: staff@ram-mount.com

This document, including images, may not be reproduced partly or fully without the expressed written consent of National Products, Inc.

Item Number
RAM-VB-102

RAM No-Drill™ Seat Bases

National Products, Inc.

Vehicle base for the

Chevrolet 2500 C/K (2000-2006)
Chevrolet 3500 C/K (2000-2006)
Chevrolet Silverado (1999-2006)
Chevrolet Suburban (2000-2006)
Chevrolet Tahoe (2000-2006)
GMC Sierra Truck (2000-2006)
GMC Yukon (2000-2006)

INSTALLATION INSTRUCTIONS

1. Remove the two front 5/16" hex nuts that hold the passenger side seat cushion to the seat track brackets.
2. Lift the front of the seat cushion off of the front of the the seat track brackets.
3. Position the VB-102 on top of the seat track brackets so the slots in the VB-102 line up with the holes in the seat track brackets.
4. Lower the seat cushion back into place, allowing the studs to pass through the holes in the VB-102 and seat track brackets.
5. Re-attach the two 5/16" hex nuts.

Optional Lever Stop Installation:
1. After mounting the vehicle base under seat, place seat in desired permanent position.
2. Attach the level stop plate onto the main seat base plate with the provided bolts. The lever stop plate should cover the seat lever after installation. This item is recommended to be installed though optional.

National Products, Inc.
Phone: 206-763-8361
Fax: 206-763-9615
Address: 8410 Dallas Ave S
Seattle, WA 98108
Website: www.ram-mount.com
Email: staff@ram-mount.com

This document, including images, may not be reproduced partly or fully without the expressed written consent of National Products, Inc.